Mounting adapter for DIN rail

Reference number:	MA-REG
EAN/GTIN:	4011377207134



For mounting the JUNG HOME gateway (ref.-no.: BTS GATEWAY..) on DIN rail for use in distribution boxes

Dimensions

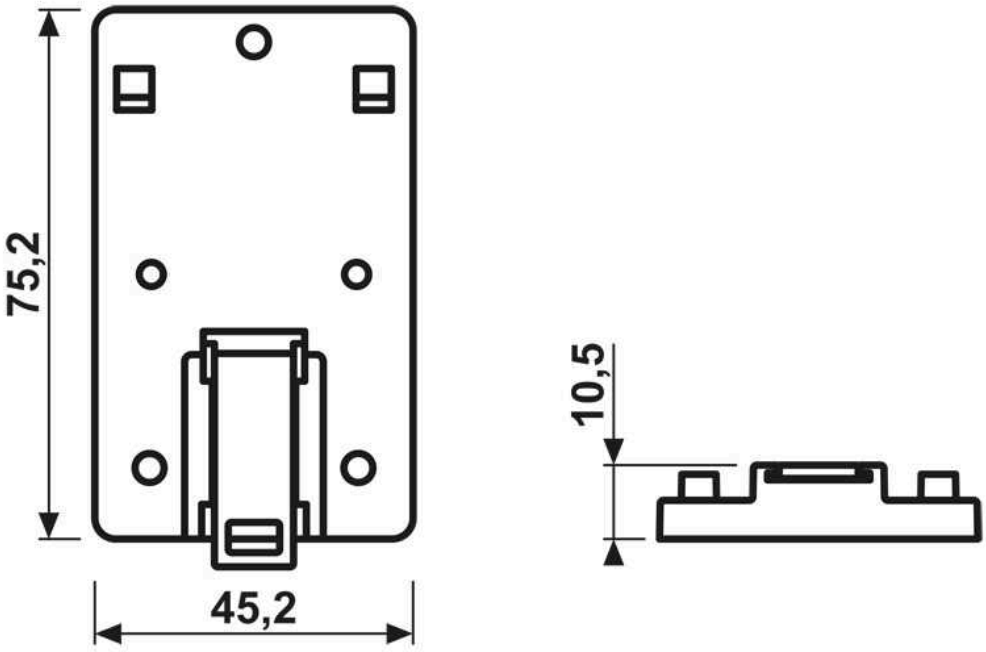

ALBRECHT JUNG GMBH & CO. KG
Volmestraße 1
58579 Schalksmühle

Phone +49 (0) 23 55/80 60
E-Mail kundencenter@jung.de

Assembly

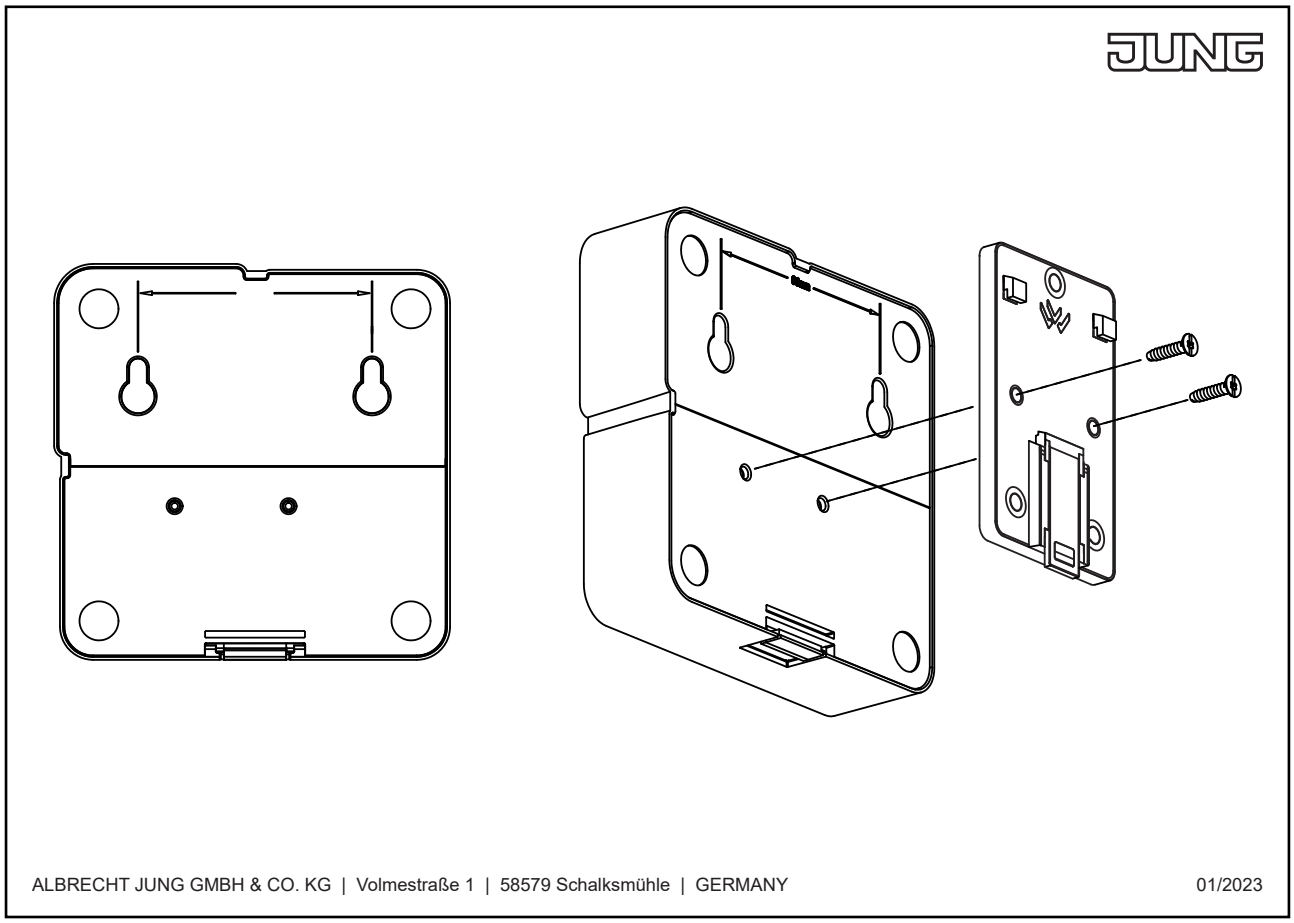
ALBRECHT JUNG GMBH & CO. KG | Volmestraße 1 | 58579 Schalksmühle | GERMANY
01/2023