JUNG HOME push-button 2-gang, with lens, LS range, classic brass



Reference number:	BT ME 17102 C
EAN/GTIN:	4011377207196
Color:	classic brass
Material:	metal

Individual colour printing possible

ELEKTROGERÄTE RÜCKNAHME

Metal versions
for inserts "blinds" ref.-no.: 1730 JE and 1731 JE
for inserts "light" ref.-no.: 1701 SE, 1701 PSE, 1704 ESE, 1702 SE, 1710 DE, 1711 DE, 1712 DE, 1713 DSTE, 1723 NE

Intended use
- Manual and automatic operation of e.g. blinds, shutters, awnings, lighting or fans
- Wireless linking with JUNG HOME system devices
- Operation with system insert for switching, dimming, blind or satellite insert 3-wire

Product characteristics
- Commissioning and operation using JUNG HOME app with mobile device (smartphone or tablet) via Bluetooth®
- Top, bottom and full-surface operation with up to 2 linked functions per rocker
- Use the buttons to control areas (groups) or to call up scenes
- Use the buttons to operate wirelessly linked JUNG HOME devices
- Use the buttons to trigger the disabling function and forced guidance
- Multi-coloured status indicator with optional night mode
- Feedback of the load status using status LED
- Disabling of local operation
- Including the load in areas (groups), central functions and scenes
- Up to 16 time programs control the functions of the respective system insert (switch on, switch off, dim, move blind, adjust temperature)
- Staircase lighting function (automatic switch-off) with switch-off warning
- Run-on time, switch-on delay, switch-off delay
- Activate/deactivate automatic functions using the JUNG HOME app
- Automatic date and time update when connecting with mobile device
- Time programs with sunrise or sunset (astro timer)
- Maximum and minimum brightness adjustable, with dimming insert
- Switch-on with last brightness or fixed switch-on brightness, with dimming insert
- Warm dimming (changing of the colour temperature with simultaneous brightness increase), with DALI insert
- Ventilation position, running time, slat change-over time, change-over time for direction change and inverse operation adjustable, with blind insert
- Disabling function and forced guidance: Lock-out protection, continuous ON/OFF or ON/OFF for a fixed time
- Evaluation of the satellite inputs (if present) for controlling the system insert
- Wind alarm via connection of weather sensors to satellite input, with blinds insert
- Bluetooth® Mesh for fully encrypted wireless communication and repeater function
- Can be updated using JUNG HOME app

Available in future via update:
(Notes on updates and schedules can be found at jung.group/junghome)
- Night light function with period for brightness reduction, with dimming insert

– Hotel function (orientation light instead of OFF), with dimming insert

A labelling request in the GRAPHIC TOOL must be submitted together with the order: jung.group/gt
Subsequent labelling of the buttons is not possible.

Technical data

Ambient temperature:	+5 ... +45 °C
Storage/transport temperature:	-25 ... +70 °C
Accuracy per month:	± 13 s
Power reserve:	approx. 4 h
Radio frequency:	2402.0 ... 2480.0 MHz
Transmitting power:	max. 10 mW (class 1.5)
Transmission range in buildings:	approx. 30 m

Dimensions

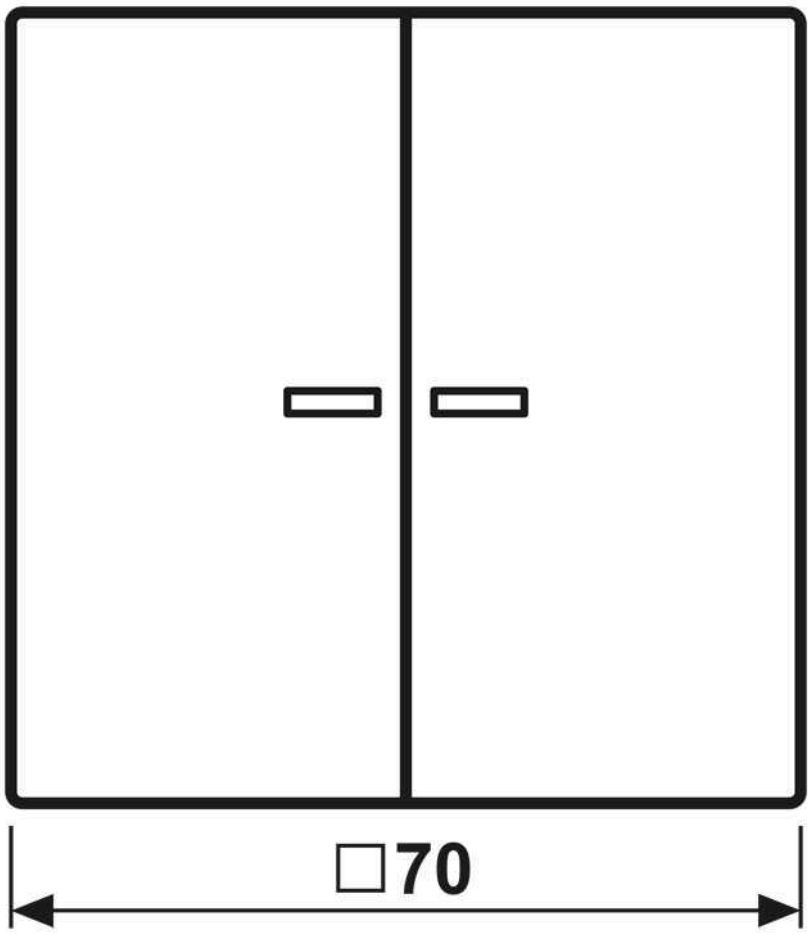

Assembly

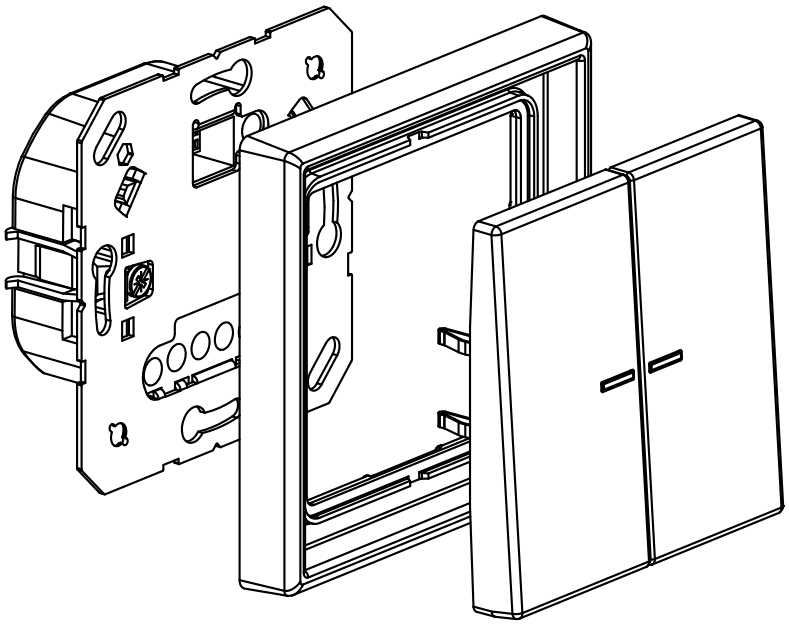

ALBRECHT JUNG GMBH & CO. KG | Volmestraße 1 | 58579 Schalksmühle | GERMANY 01/2023