JUNG HOME room thermostat display, AS/A range, black



Reference number:	BT A 1791 SW
EAN/GTIN:	4011377202689
Color:	black
Material:	glass

ELEKTROGERÄTE RÜCKNAHME

for room thermostat insert ref.-no.: 1790 RTR
for switch inserts ref.-no.: 1701 SE, 1701 PSE, 1704 ESE
for satellite insert ref.-no.: 1723 NE

Intended use
- Manual and time-controlled regulation of the room temperature
- Wireless linking with JUNG HOME system devices
- Operation with system insert for room temperature control
- Operation with system insert for switching

Product characteristics
- Commissioning and operation using JUNG HOME app with mobile device (smartphone or tablet) via Bluetooth®
- Up to 16 time programs for automatic heating
- Switch between manual/automatic operation using JUNG HOME app or local operation
- Automatic date and time update when connecting with mobile device
- Time programs with sunrise or sunset (astro timer)
- Setting a comfort, ECO, cooling and frost protection temperature
- Setting range for min. and max. temperature value can be changed
- Boost function: Quick heat-up for max. 5 minutes
- Illuminated segment display for easy reading
- Display switch-off after 2 minutes or continuous display possible
- Disabling of local operation
- Including the load in areas (groups), central functions and scenes
- Optimised heating up (temperature is reached at the set time), can be switched off
- Adaptation to valves (normally open or normally closed)
- Cooling mode possible (optimised for heat pumps)
- Supports internal and external temperature sensor
- Temperature sensor offset (correction value for the measured temperature)
- Controller output working method: pulse width modulation (PWM) or two-point
- Room thermostat can be linked with switch actuators and sockets

Technical data

Ambient temperature:	-5 ... +45 °C
Storage/transport temperature:	-20 ... +70 °C
Accuracy per month:	± 10 s

Power reserve:	min. 4 h
Radio frequency:	2402.0 ... 2480.0 MHz
Transmitting power:	max. 10 mW (class 1.5)
Transmission range	
Transmission range in buildings:	approx. 30 m
Regulator class (EU 811/2013):	IV
Contribution to energy efficiency:	2 %

Dimensions

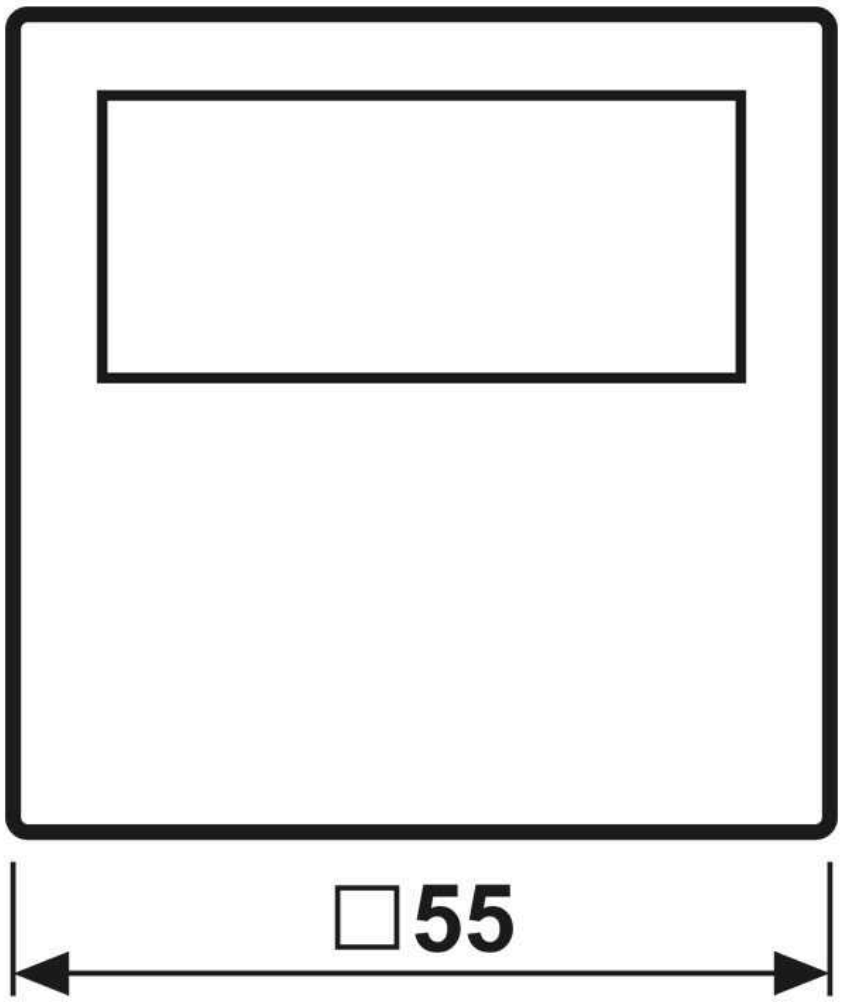

Assembly

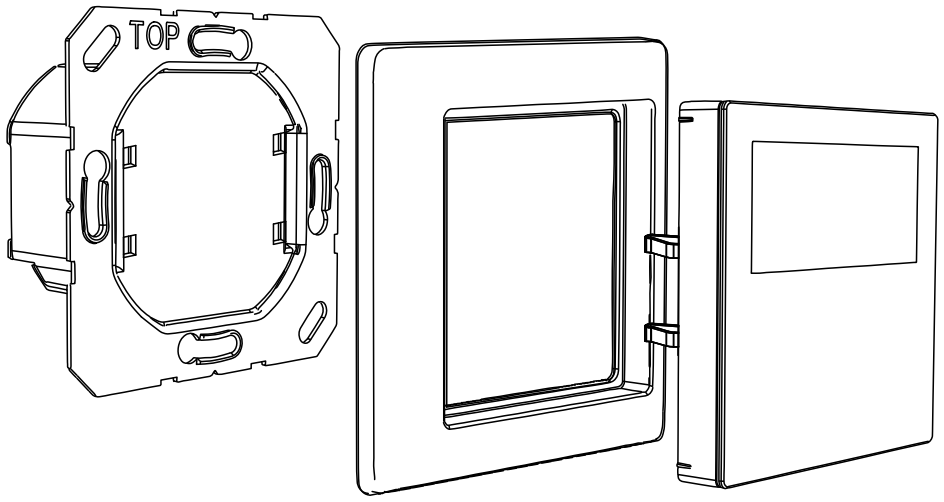

ALBRECHT JUNG GMBH & CO. KG | Volmestraße 1 | 58579 Schalksmühle | GERMANY 02/2023