JUNG HOME SCHUKO® socket Energy, 16 A, with pilot light, Safety Plus, AS/A range, white



Reference number:	BT A 1521 SE WW
EAN/GTIN:	4011377201514
Color:	white
Material:	thermoplastic

Individual colour printing possible
Individual laser engraving possible

ELEKTROGERÄTE RÜCKNAHME

Thermoplastic (breakproof) high-gloss
with enhanced contact protection / shutter (Safety Plus)
with screw terminals for rigid and flexible wires up to 2.5 mm^2

Supporting frame, claws and claw screws are integrated into the earth protection.

Intended use
- Manual or automatic switching of lighting and common household devices
- Power (W) and energy measurement (kWh) of the connected devices
- Wireless linking with JUNG HOME system devices
- For use in dry indoor areas
- Installation in flush box with dimensions according to DIN 49073
- Depth of flush box (inner dimension): min. 53 mm

Product characteristics
- Commissioning and operation using JUNG HOME app with mobile device (smartphone or tablet) via Bluetooth®
- Button for switching
- Multi-coloured status indicator with optional night mode
- Disabling of local operation
- Up to 16 time programs
- Switch-on delay / switch-off delay
- Including the load in areas (groups), central functions and scenes
- Activate/deactivate automatic functions using the JUNG HOME app
- Disable and forced operation: continuous ON/OFF or ON/OFF for fixed time
- Automatic date and time update when connecting with mobile device
- Time programs with sunrise or sunset (astro timer)
- Integrated 16 A switch actuator
- Power measurement from 0.1 to 3680 Watt and energy measurement (kWh)
- Recording of the energy flow over previous 24 hours and previous 31 days (charting)
- Operating hours counter, energy measurement period
- Power Save function (switches off standby electrical loads)
- Master/slave function (switches a wirelessly linked electrical load depending on the electrical load connected)
- Overcurrent protection shutdown
- Bluetooth® Mesh for fully encrypted wireless communication and repeater function
- Can be updated using JUNG HOME app

Available in future via update:
(Notes on updates and schedules can be found at jung.group/junghome)
- Supplied power of -0.1 to -3680 Watt and supplied energy (kWh)

ALBRECHT JUNG GMBH & CO. KG
Volmestraße 1
58579 Schalksmühle
Phone +49 (0) 23 55/80 60
E-Mail kundencenter@jung.de

Accessories:
Frame 28 mm structure height ref.-no.: A 558.. HBF ..

Technical data

Rated voltage:	AC 220 ... 250 V ~
Mains frequency:	50/60 Hz
Stand-by power:	max. 0.25 W
Ambient temperature:	-5 ... +45 °C
Transport temperature:	-25 ... +70 °C
Storage temperature:	-5 ... +45 °C
Relative humidity:	20 ... 70 % (no condensation)
Accuracy per month:	± 13 s
Power reserve:	min. 4 h
Active power:	-3680 ... 3680 W
Accuracy (power):	1% ±0.05 W
Active energy:	-999,999 ... 999,999 kWh
Switching current at 25 °C	
Ohmic:	16 A
Motors:	4.3 A (@ cos 0.6)
Connected load	
Incandescent lamps:	2300 W
HV halogen lamps:	2300 W
Electronic transformers:	1500 W
Inductive transformers:	1000 VA
HV LED lamps:	typical 400 W
Compact fluorescent lamps:	typical 400 W
Fluorescent lamps non-compensated:	920 VA
Installation depth:	45 mm
Radio frequency:	2402.0 ... 2480.0 MHz
Transmitting power:	max. 10 mW (class 1.5)
Transmission range	
Transmission range in buildings:	approx. 30 m

Dimensions

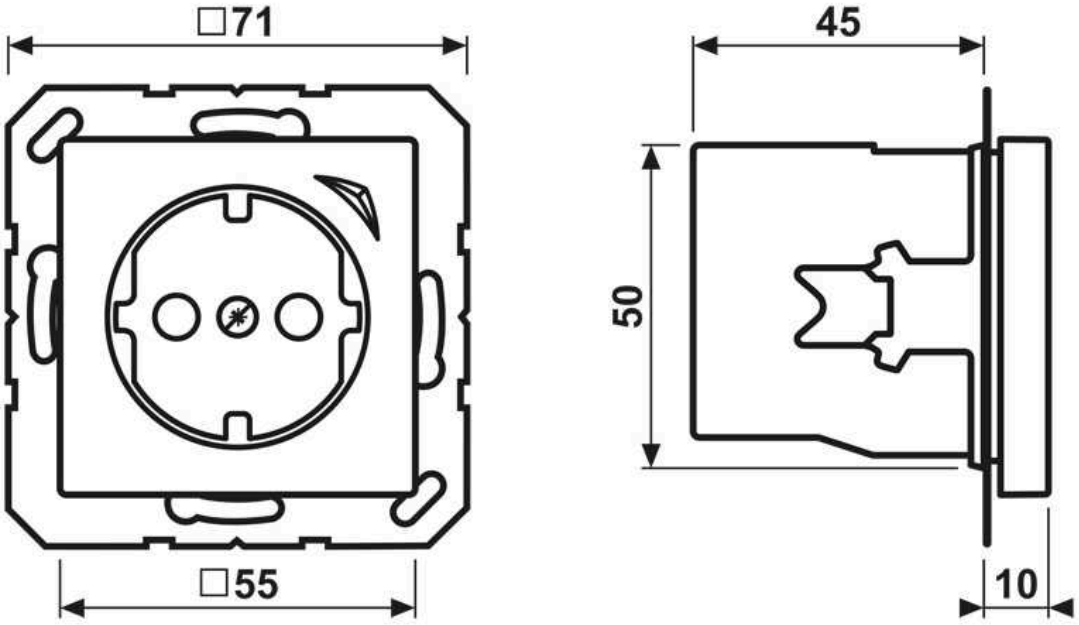

ALBRECHT JUNG GMBH & CO. KG
Volmestraße 1
58579 Schalksmühle

Phone +49 (0) 23 55/80 60
E-Mail kundencenter@jung.de

Assembly

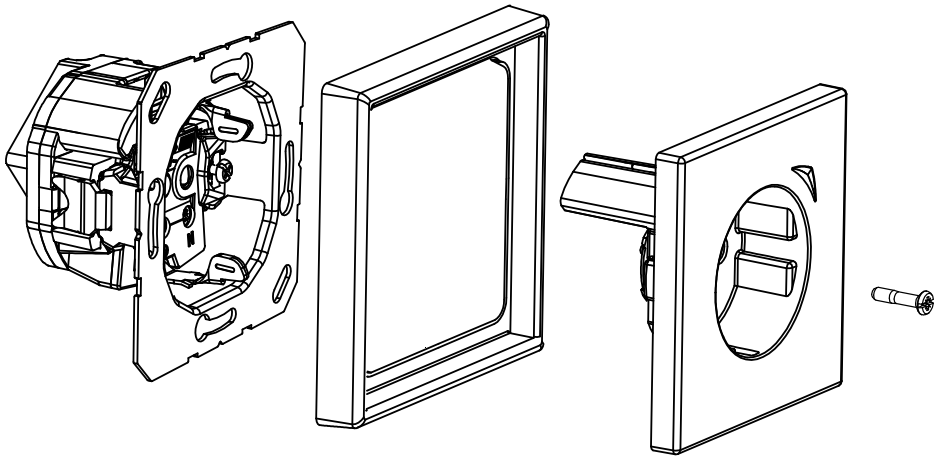

ALBRECHT JUNG GMBH & CO. KG | Volmestraße 1 | 58579 Schalksmühle | GERMANY 02/2023