JUNG HOME push-button, battery-powered, 2-gang, AS/A range



Reference number:	BT A 1002
EAN/GTIN:	4011377201415

ELEKTROGERÄTE RÜCKNAHME

including mounting plate, adhesive film and fastening screw
for rockers ref.-no. .. 102 KO5 .. of the AS and A ranges

Intended use
- Operation of e.g. Venetian blinds, shutters, awnings, lighting or fans
- Wireless linking with JUNG HOME system devices
- Mounting on wall box with dimensions according to DIN 49073
- Screw fixing on walls or adhesive fixing on smooth surfaces

Product characteristics
- Commissioning and operation using JUNG HOME app with mobile device (smartphone or tablet) via Bluetooth®
- Multi-coloured status indicator
- Central functions: all ON/all OFF, call up scenes
- Disabling of local operation
- Fully encrypted wireless communication
- Compatible with Bluetooth® Mesh Standard
- Can be updated using JUNG HOME app
- Battery operation with one included lithium button cell

Technical data

Rated voltage:	DC 3 V
Ambient temperature:	-5 ... +45 °C
Storage/transport temperature:	-25 ... +70 °C
Battery type:	1 x lithium CR 2450 Duracell (recommended) or CR 2450N
Radio frequency:	2402.0 ... 2480.0 MHz
Transmitting power:	max. 10 mW, class 1.5
Transmission range	
Transmission range in buildings:	approx. 30 m

Assembly

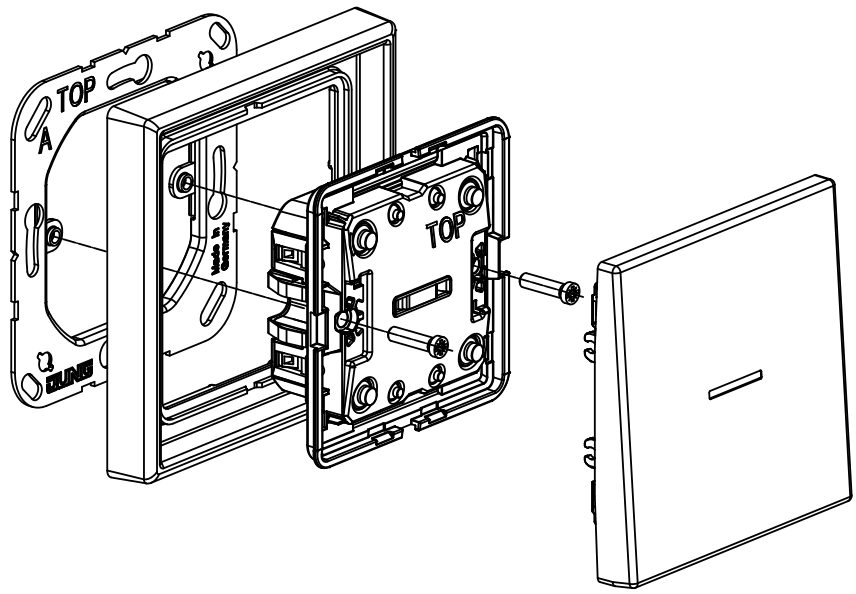

ALBRECHT JUNG GMBH & CO. KG | Volmestraße 1 | 58579 Schalksmühle | GERMANY 09/2022