Rocker 1-gang, F10, thermoplastic, A range, white

Reference number:	A 101 BF WW
EAN/GTIN:	4011377179394
Color:	white
Material:	thermoplastic

Individual colour printing possible
Individual laser engraving possible

Thermoplastic (breakproof) high-gloss
for KNX push-button 1-gang ref.-no.: A 1091 2ST, A 1071 1ST, A 1091 1ST, A 1091 1TE

Dimensions

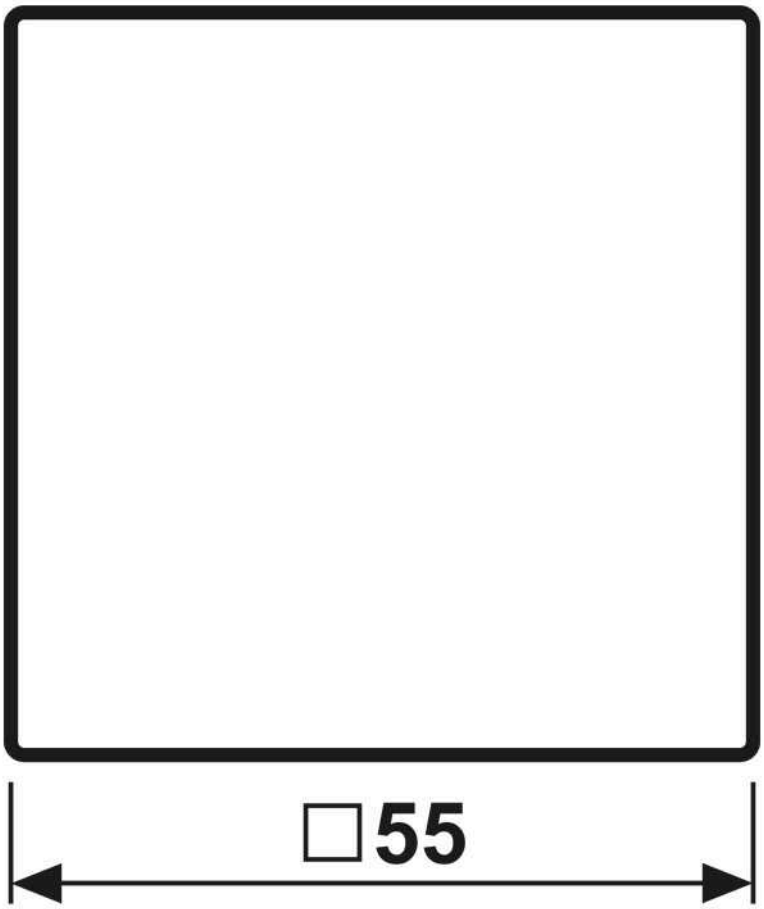

ALBRECHT JUNG GMBH & CO. KG
Volmestraße 1
58579 Schalksmühle

Phone +49 (0) 23 55/80 60
E-Mail kundencenter@jung.de

Assembly

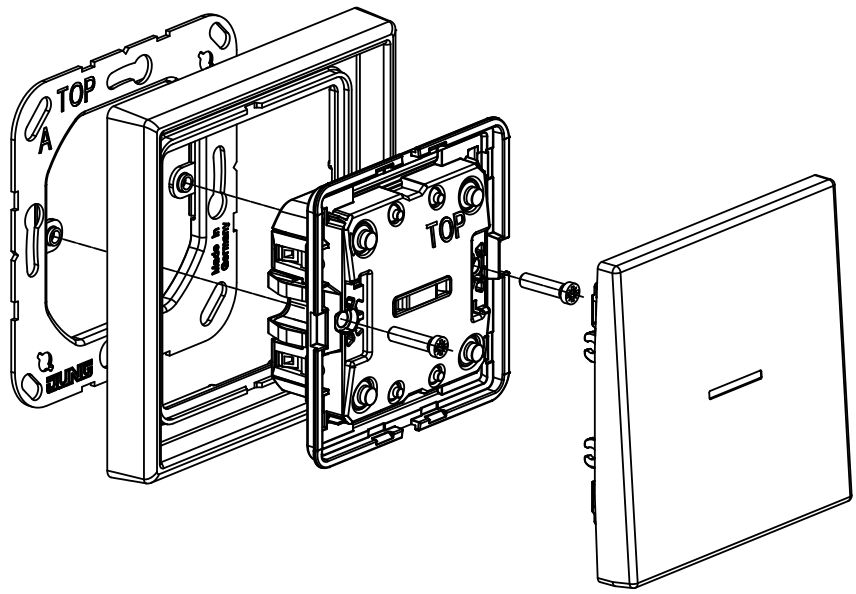

ALBRECHT JUNG GMBH & CO. KG | Volmestraße 1 | 58579 Schalksmühle | GERMANY 09/2022