LUXA 103 S360-12 KNX DE AN

Item no.: 1039153

Presence and motion detectors
Ceiling installation indoor

Description

- Presence detector (PIR) for ceiling installation in suspended ceilings indoor, Data Secure
- Round detection area 360° , Ø 12 m (113 m²) at 3 m mounting height
- For KNX bus system, 2 channels light and 2 channels presence for HVAC control
- 2 channels light with 1 light measurement
- Automatic lighting control with constant light control or switching mode

- Dimmable lighting in switching mode with and without daylight influence
- Integrated temperature sensor
- Day / night switching via telegram
- Stand-by functionality (orientation light)
- 3 logic channels (AND/OR/XOR)
- KNX Data-Secure
- Operation as fully or semi-automatic possible
- Manual override possible via external KNX push-buttons
- One directional brightness measurement (mixed light measurement)
- Simple adjustment of the brightness measurement
- Short-term presence
- Selectable control speed
- Teach-in function
- Scene functionality
- Locking functions
- Switch-on delay and presence follow-up time adjustable
- Extension of the detection area through parallel connection
- Detection sensitivity can be changed for outdoor use
- Test mode for checking function and detection area
- Setting via ETS software (full range of functions)
- Setting via remote control/APP or APP (BLE)



Technical data

	LUXA 103 S360-12 KNX DE AN
Installation height	2,5 - 6 m
Detection angle	360°
Type of connection	KNX bus terminal
Installation type	Ceiling mounting
Light measurement	Mixed light measurement
Switch-on delay presence	10 s - 30 min / inactive

	LUXA 103 S360-12 KNX DE AN
Cut-out	68 mm
Ambient temperature	-25°C ... 55°C
Detection range	113 m² (ø 12 m)
Colour	Anthracite (similar to RAL 7016)
Type of protection	IP 54 (when fitted)

LUXA 103 S360-12 KNX DE AN

Item no.: 1039153

Detection Area for planning applications at a temperature of 21 °C

Mounting height (A)	Sitting (S)	Diagonally (T)	Head on to (R)
2,5 m	13 m² | 4 m	78 m² | 10 m	28 m² | 6 m
3 m	20 m² | 5 m	113 m² | 12 m	28 m² | 6 m
3,5 m	20 m² | 5 m	78 m² | 10 m	28 m² | 6 m
4 m	-	78 m² | 10 m	28 m² | 6 m
6 m	-	113 m² | 12 m	28 m² | 6 m

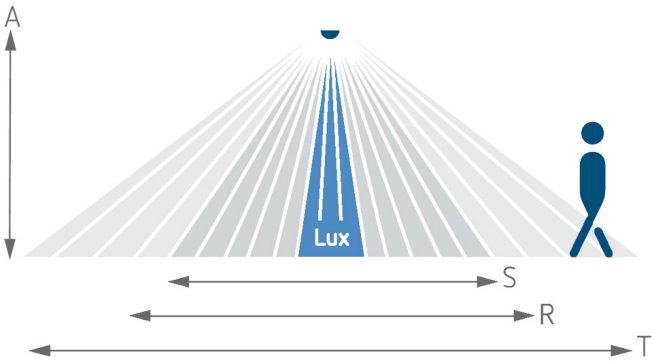

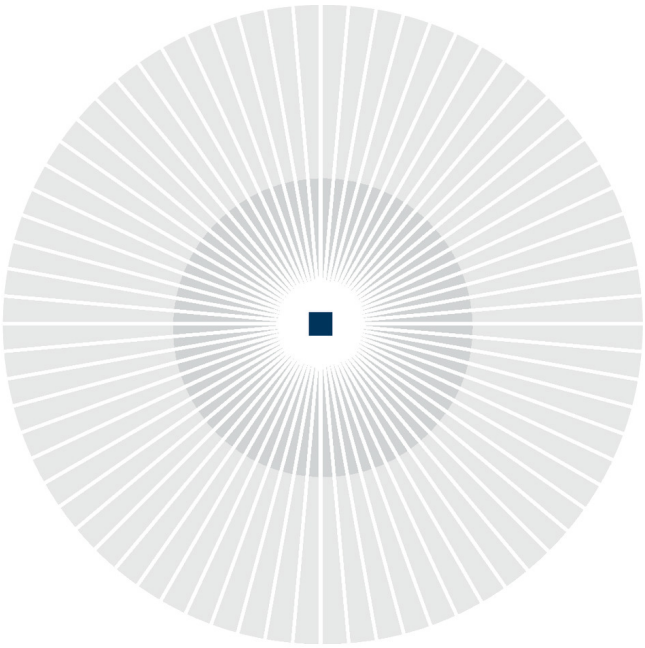

LUXA 103 S360-12 KNX DE AN

Item no.: 1039153

Scale Drawings

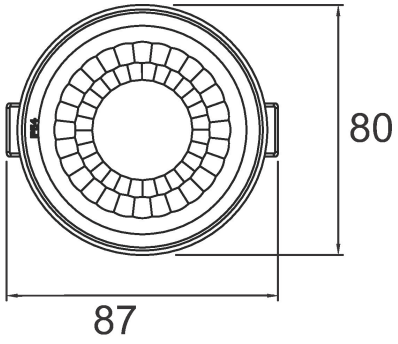

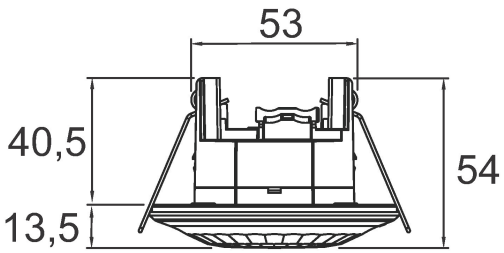

Accessories

theSenda P
Item no.: 9070910

theSenda S
Item no.: 9070911

theSenda B
Item no.: 9070985

QuickSafe
Item no.: 9070531